Signals and Systems
E-623

Lecture 8

Using Matlab/Simulink for Solving Ordinary Differential Equations

Dr.Eng. Basem ElHalawany

Using Matlab for Solving Ordinary Differential Equations

- The built-in matlab function "ode45" is used t solve first-order ordinary differential equations

$$\frac{dx}{dt} = f(x,t)$$

Example: $\frac{dx}{dt} = 3e^{-t}$ with an initial conditions $x(0) = 0$

- You need to know the syntax of using "ode45":

```
[t,x]=ode45( @rhs, t, initial_x);
```

Solving 1st Ordinary Differential Equations

- You need to create a function carrying the right-hand side (rhs):

```
function dxdt=rhs(t,x)
    dxdt = 3*exp(-t);
end
```

- You need to create a function or m-file to call the ode45 to solve:

```
% SOLVE  dx/dt = -3 exp(-t).
% initial conditions: x(0) = 0

t=0:0.001:5;    % time scalex
initial_x=0;

[t,x]=ode45( @rhs, t, initial_x);

plot(t,x);
xlabel('t'); ylabel('x');
```

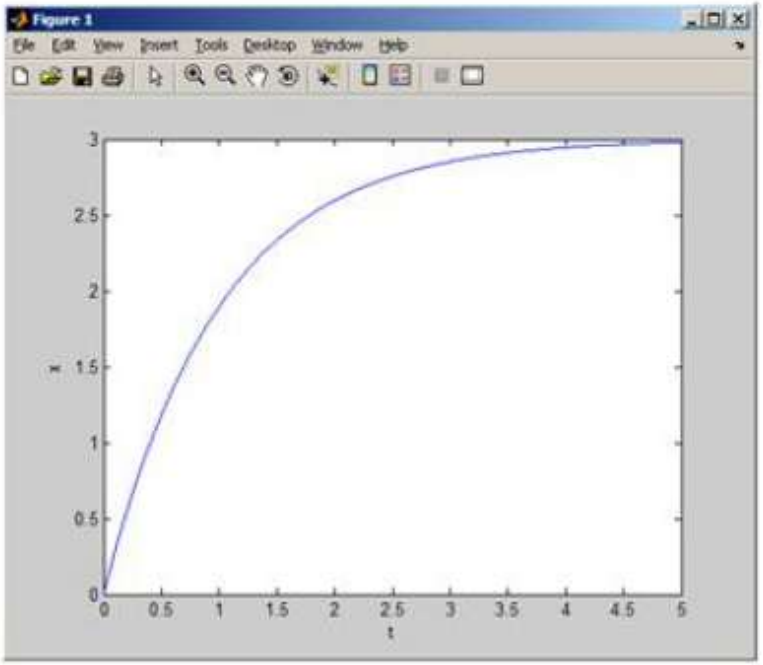

Solving higher Ordinary Differential Equations

- You need to convert the higher-order ODE to a group of 1st order ODE

Example:

$$\frac{d^2x}{dt^2} + 5\frac{dx}{dt} - 4x(t) = \sin(10\ t)$$

- ✓ Recall that an n-order ODE can be converted to n first order ODE's.
- Introduce 2 new state variables (x1, x2)and carry the following derivation:

$$\left.\begin{aligned} x_1 &= x \\ x_2 &= x' \end{aligned}\right\} \xrightarrow{\text{take derivative}} \left.\begin{aligned} x_1' &= x' \\ x_2' &= x'' \end{aligned}\right\}$$

$$\xrightarrow{\text{do replacement}} \left.\begin{aligned} x_1' &= x_2 \\ x_2' &= -5x' + 4x + \sin(10t) \end{aligned}\right\} \rightarrow$$

$$\left.\begin{aligned} x_1' &= x_2 \\ x_2' &= -5x_2 + 4x_1 + \sin(10t) \end{aligned}\right\}$$

2
1st order ODEs

Solving higher Ordinary Differential Equations

2
1st order ODEs

$$\left.\begin{aligned} x_1' &= x_2 \\ x_2' &= -5x_2 + 4x_1 + \sin(10t) \end{aligned}\right\}$$

- Now ode45 can be used to solve this in the same way as with the first example.
- The Only difference is that now an array is used instead of a scalar.

- You need to create a function carrying the right-hand side (rhs):

```
function dxdt=rhs(t,x)
    dxdt_1 = x(2);
    dxdt_2 = -5*x(2) + 4*x(1) + sin(10*t);

    dxdt=[dxdt_1; dxdt_2];
end
```

- You need to create a function or m-file to call the ode45 to solve:

```
t=0:0.001:3;    % time scale

initial_x    = 0;
initial_dxdt = 0;

[t,x]=ode45( @rhs, t, [initial_x initial_dxdt] );

plot(t,x(:,1));
xlabel('t'); ylabel('x');
```

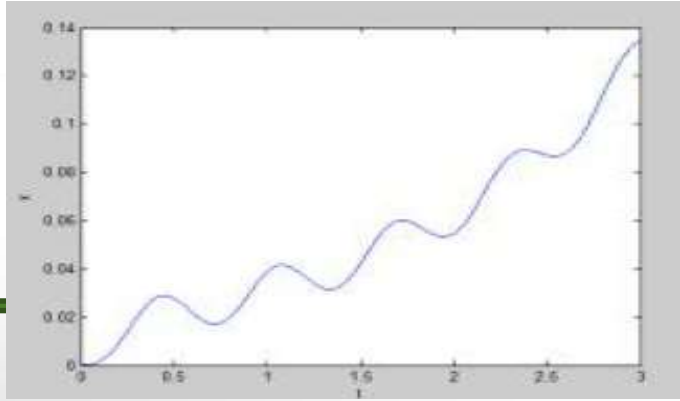

Using Simulink for solving Ordinary Differential Equations

- Example : Simulate the 1st order D.E with an input of one-second pulse

$$\frac{dy}{dt} + 2y = u(t) - u(t-1)$$

- Write the equation with the 1st order term in the L.H.S.

The differential equation above can be written as:

$$\frac{dy}{dt} = -2y + u(t) - u(t-1) = -2y + p(t)$$

where p(t) is the one second pulse.

- The right hand side of this equation can be modeled in Simulink

Using Simulink for solving Ordinary Differential Equations

- Drag the Pulse Generator from the Source sub-library into the model window.
- The subtraction block and the gain block are found in the Math Operations sub-library.
- Double click the Pulse Generator and modify the parameters as shown in figure

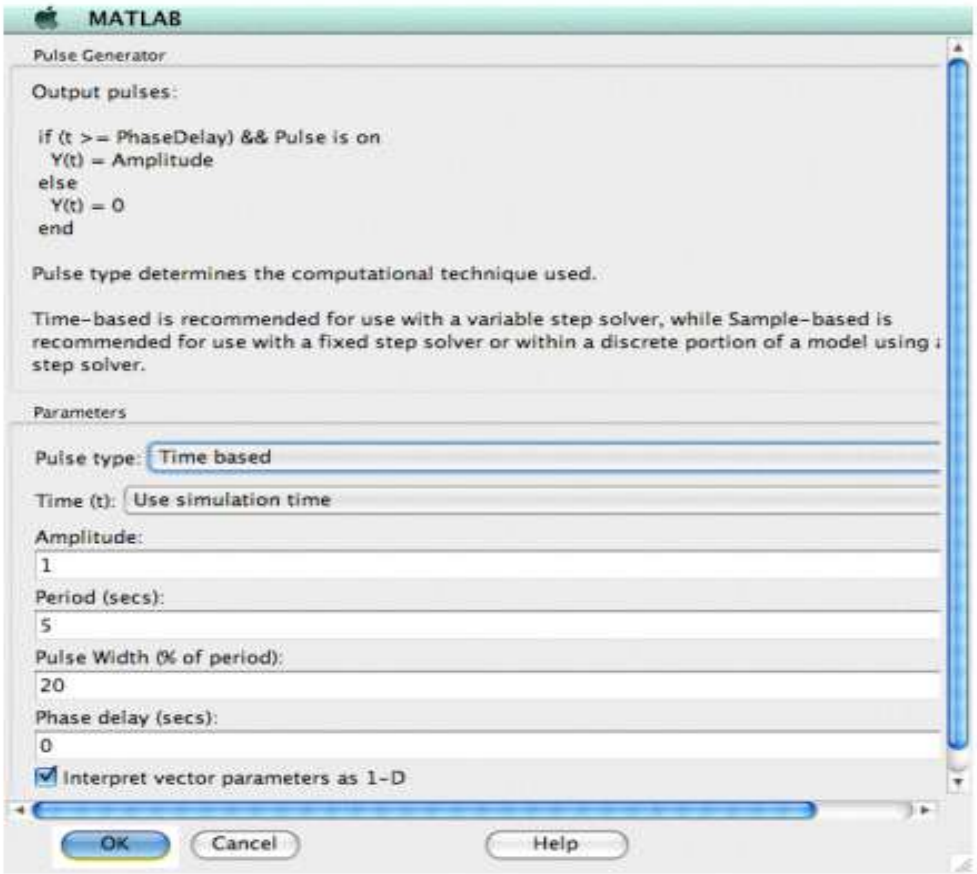

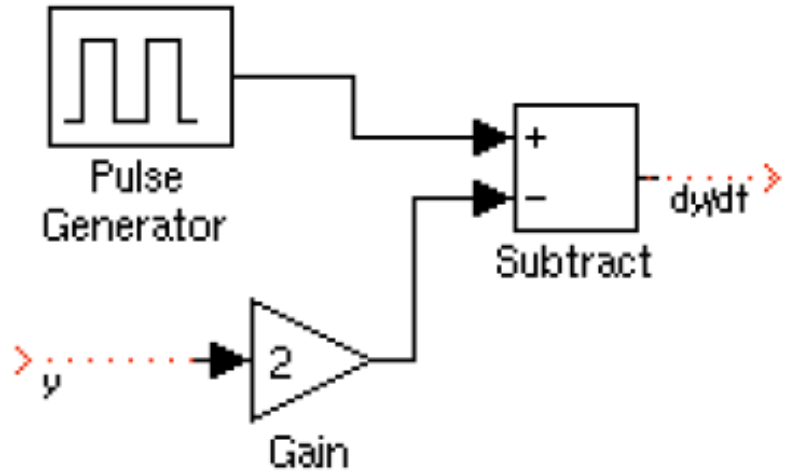

Using Simulink for solving Ordinary Differential Equations

- Change the simulation time in the configuration parameters to five seconds and simulate the system.
- Specify fixed-step samples of 0.01 seconds.

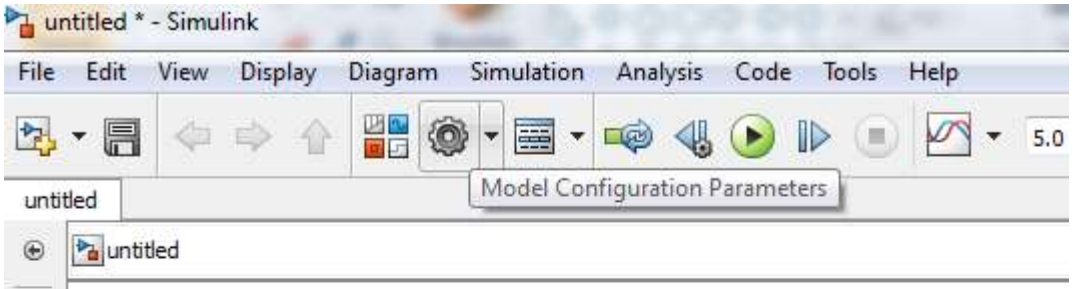

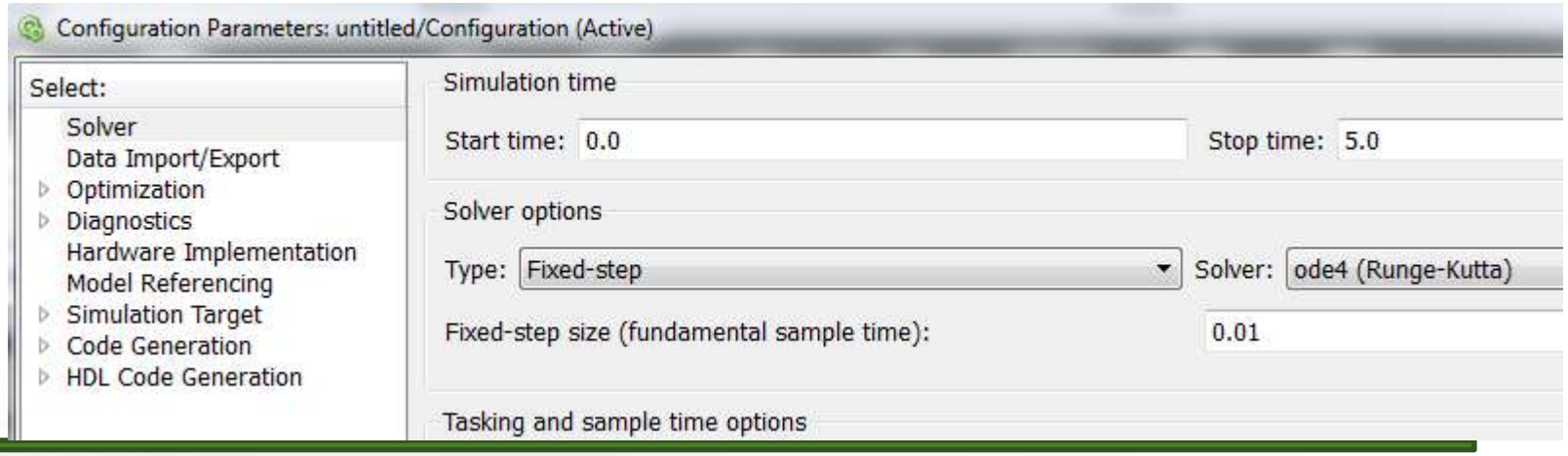

Using Simulink for solving Ordinary Differential Equations

- If the input to the gain block is y, then the output of the subtractor is dy/dt.
- By passing this output through an integrator, the input y is found.

- Click once on the "Sinks" sub-library in the left part of the Library Browser and Click and drag the "Scope" icon to the model window
- Open the Continuous sub-library. Drag the Integrator block into the model

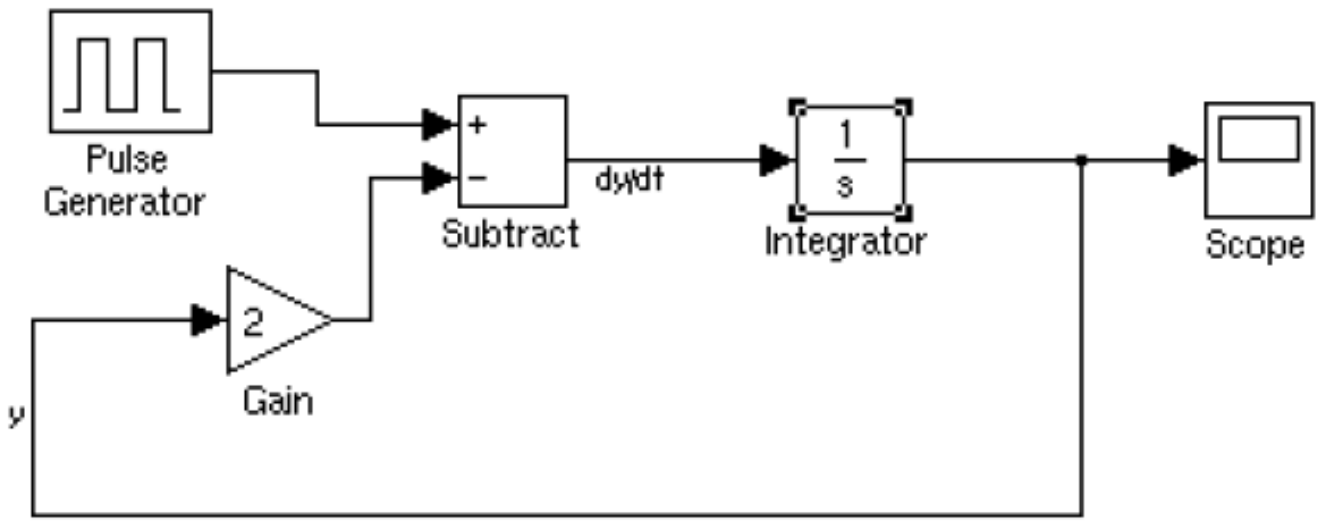

- ✓ The labels on the wires are inserted by double clicking on the wires and typing in the text.
- ✓ The initial condition of "y" could be added by double-clicking the integrator

Using Simulink for solving Ordinary Differential Equations

- Simulate the circuit for 10 seconds.
- The output shown in figure 18 is obtained on the scope.

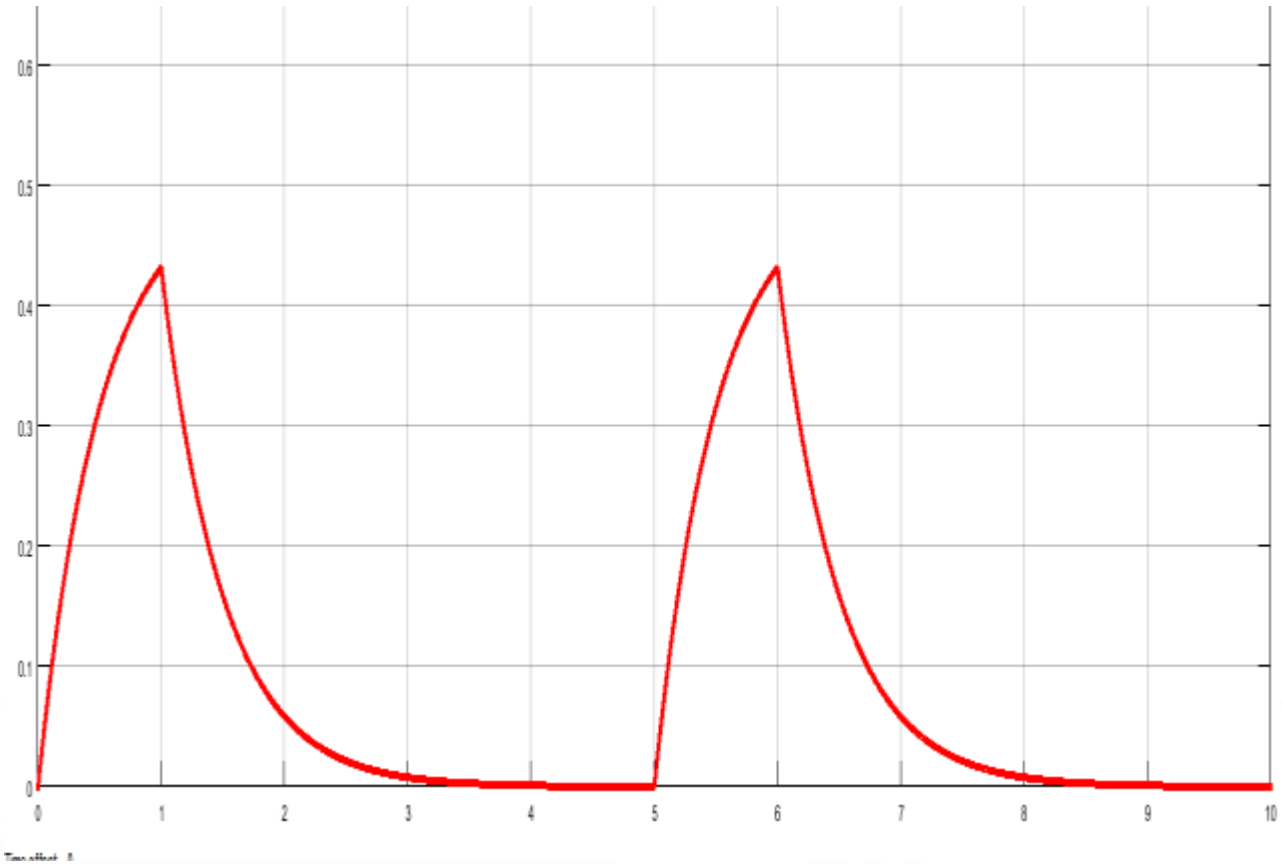

Using Simulink for 2nd order ODE

Example:

$$\frac{d^2y}{dt^2} + 3\frac{dy}{dt} + 2y = \cos 2t$$

- Write the equation with the 2nd order term in the L.H.S.

$$\frac{d^2y}{dt^2} = -3\frac{dy}{dt} - 2y + \cos 2t$$

- The right hand side of this equation can be modeled in Simulink

- In order to get the three input subtractor, use the two input subtractor selected above & Double click on the block and change the "List of Signs" to: + - -

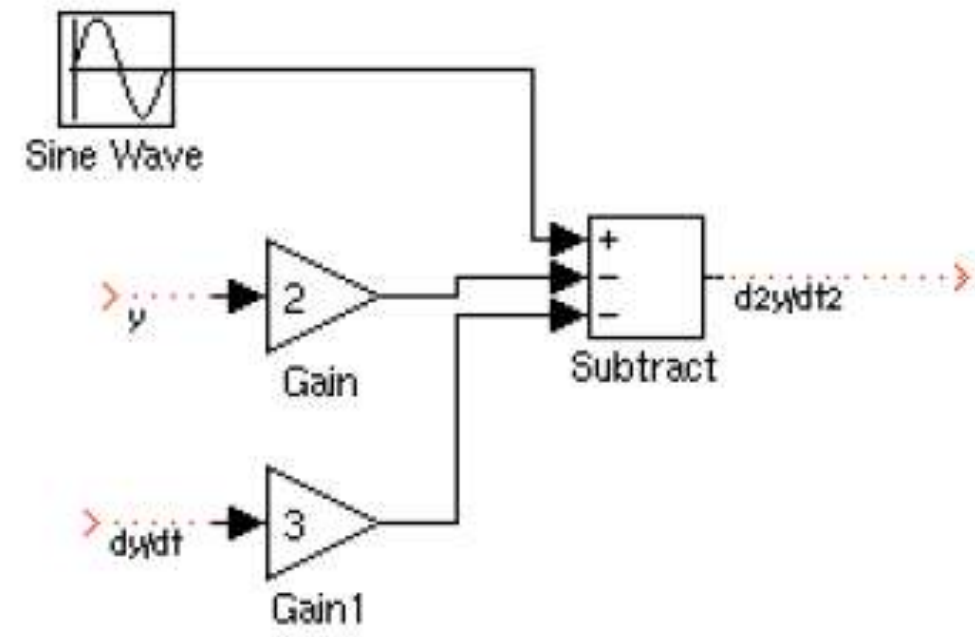

Using Simulink for 2nd order ODE

- In order to get (y , dy/dt) we need to integrate the output of the summer twice.

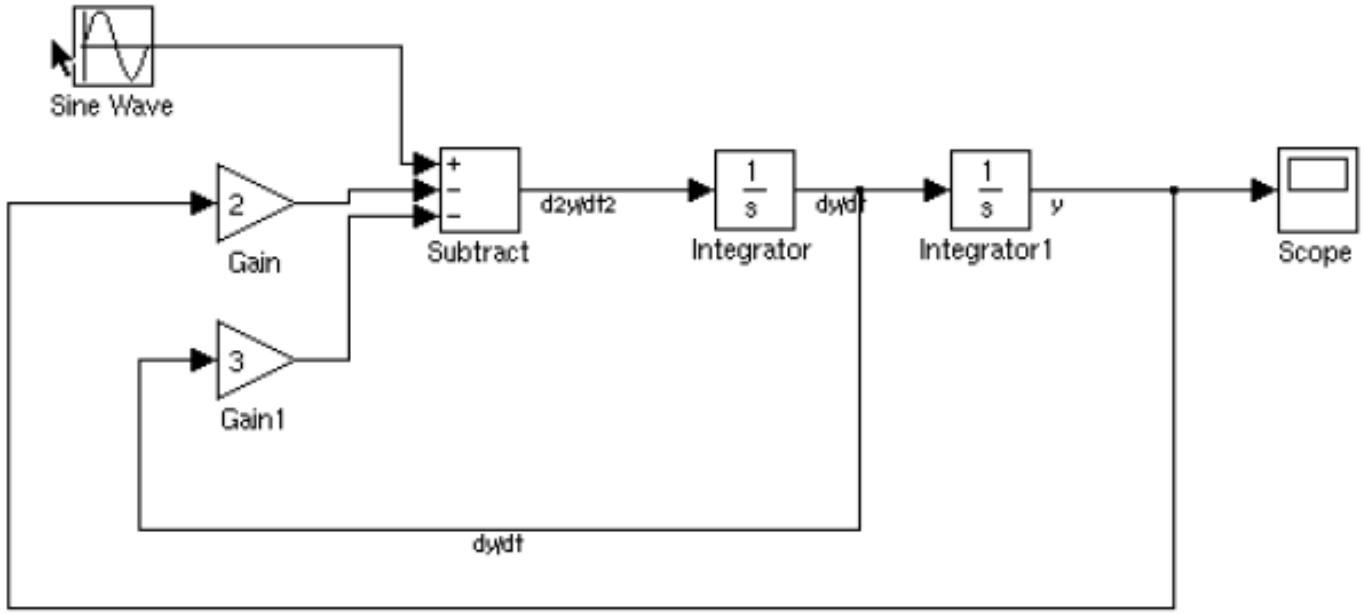

the initial conditions: $y(0) = 0$ and $\left.\frac{dy}{dt}\right|_{t=0} = 1$

- ✓ The second integrator outputs the value of y. Thus, the default initial condition of zero is correct.
- ✓ The first integrator outputs dy/dt. Double click on the first integrator and change the initial condition to one.

Using Simulink for 2nd order ODE

- ✓ Simulate for 10 seconds